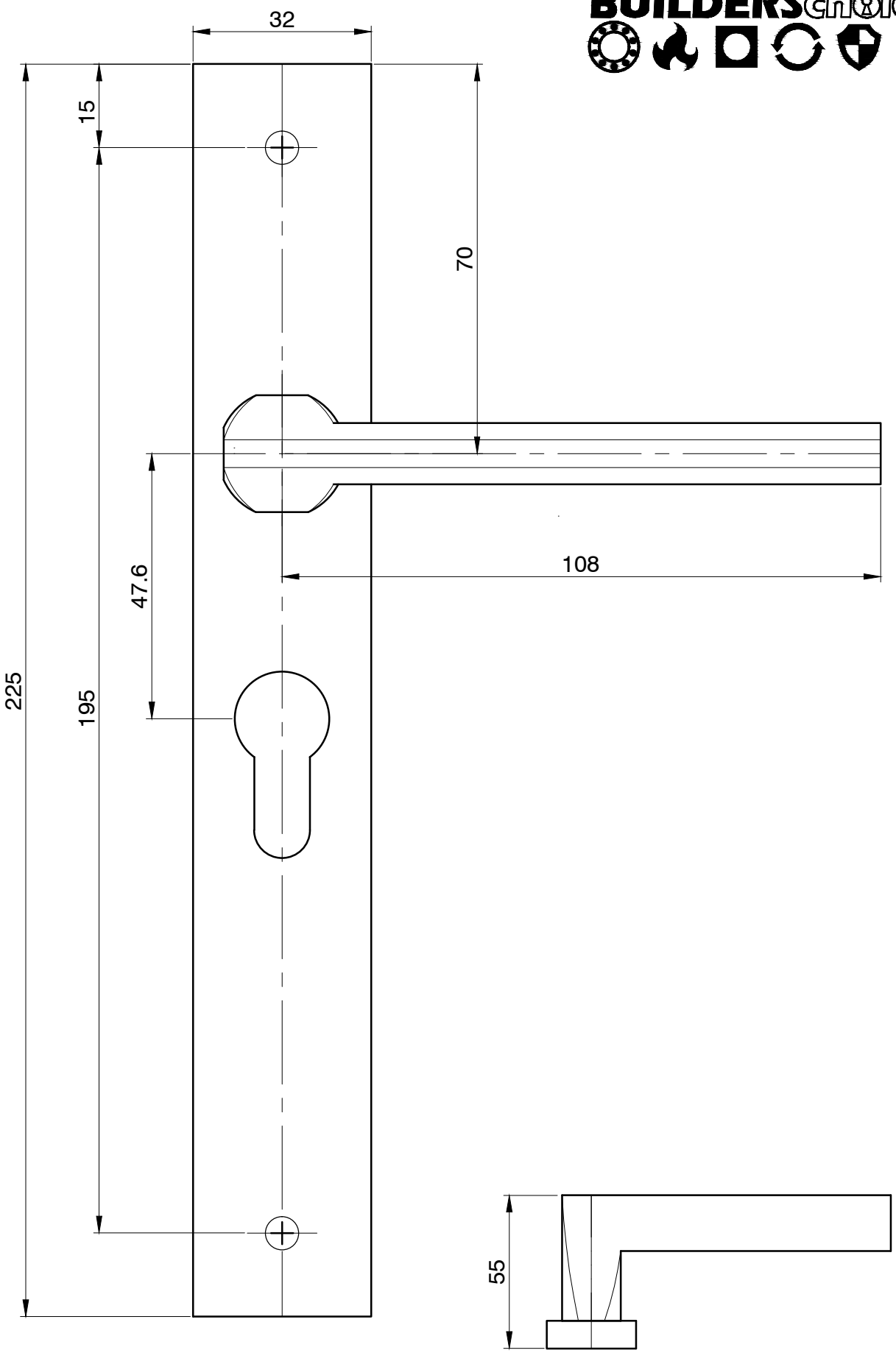

Builders Choice Door Handle Euro 47.6mm

APPLICABLE TO ALL FINISHES

PRODUCT CODE: 3675A